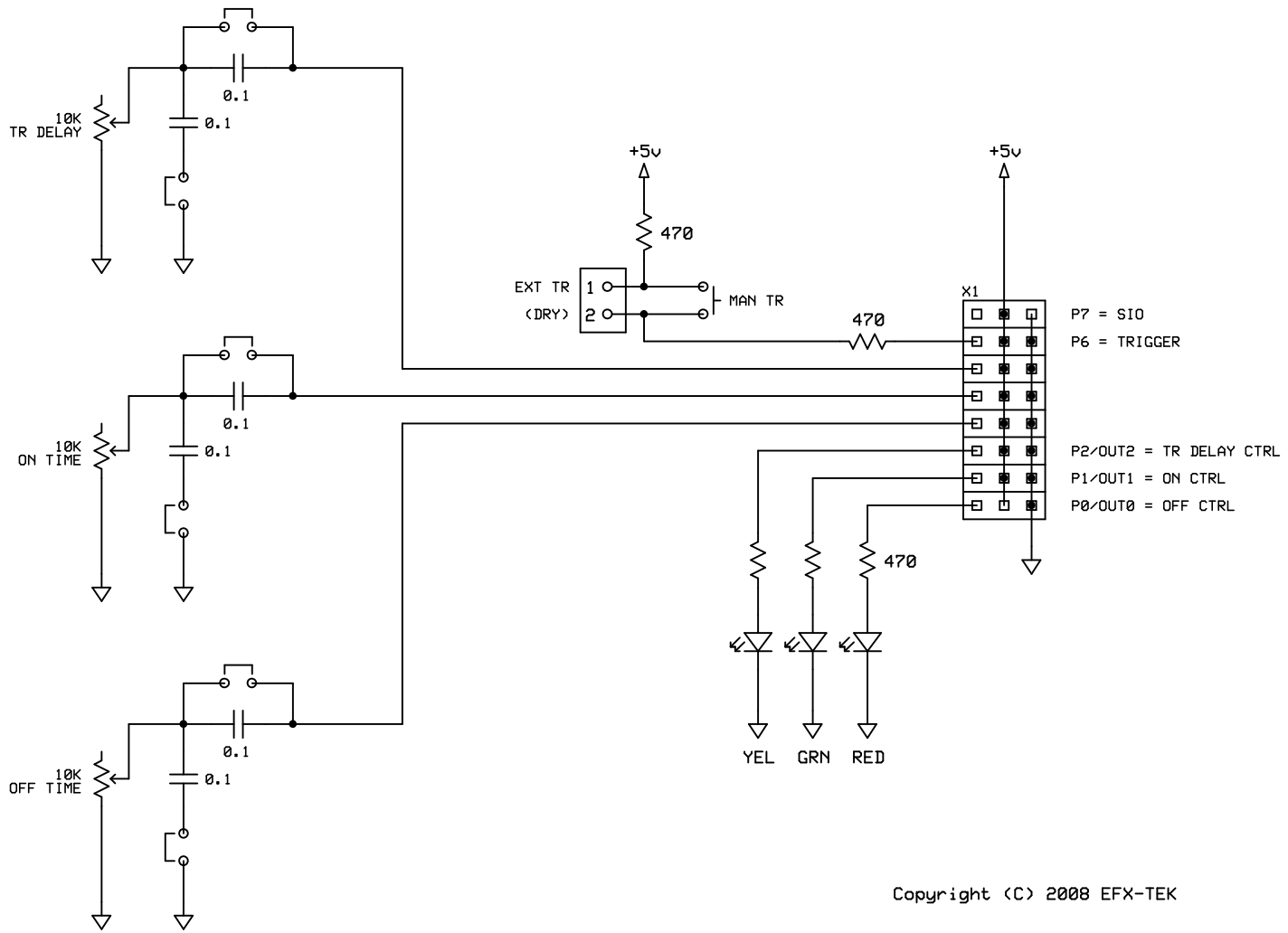

Copyright (C) 2008 EFX-TEK

Prop-1 -- All jumpers removed (default)
Prop-2 -- All jumpers installed (solder bridged)

EFX-TEK EZ-3		
3-Stage Control Add-On		
JW / JB	Rev 0.8 17 NOV 2008	Page 1 of 1